CARLOR ENGINEERING

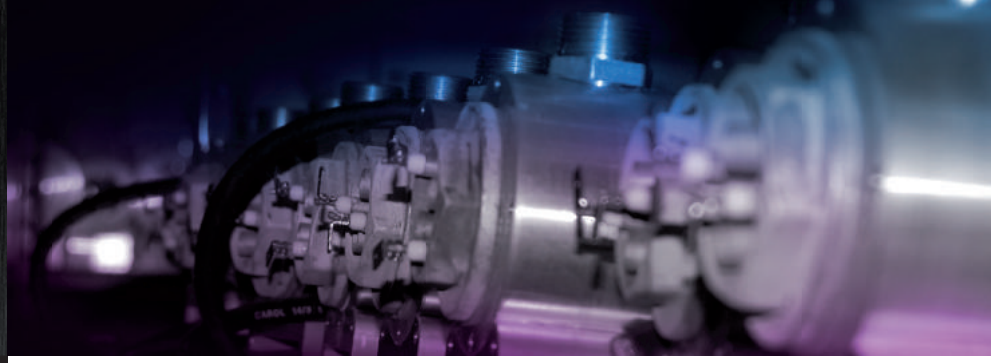

HISTORY

Carlor Engineering, Belgian manufacturer, it is 10 years experience in the development of electric coolant heaters for all types of water-cooled engines. Carlor Engineering quickly became the leader in this field with the assets of a small company: reactivity, adaptation to market demand, quality and reliability.

THERMOSTART

Tank-style engine pre-heating systems
Without pump

These system are electric coolant heaters for all types of water-cooled engines. The coolant is then heated and pushed back by a thermo-siphon process into an opening near the top of the engine. This ensures an easy full power start whatever the ambient temperature and avoids cold start mechanical damage. They are suited for all industrial applications, either stationary (generator sets) or mobile (vehicles, trucks, vans, ambulances).

These heaters are very compact, maintenance free and easy-to-install. The system has the following advantages : Fuel savings, decreasing pollution, reduced engine wear, no more difficult cold starts, vehicle cab heater instantly operational.

APPLICATIONS

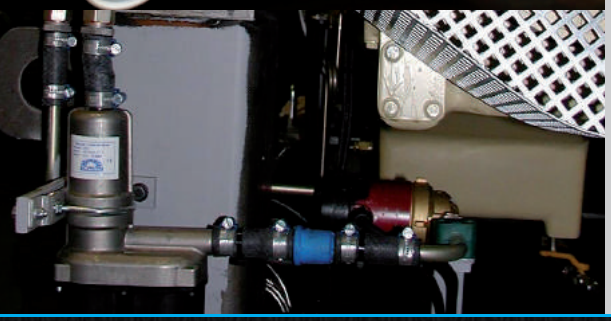

Product benefits

- Heavy machined aluminium body 100% recyclable
- Heating element with top-quality shielding and low specific power, increasing its life-cycle and that of the coolant
- Control thermostat with high cutout power for an optimised life cycle
- Safety thermostat with manual re-set option to protect the heating element if water levels in the circuit are low or if the control thermostat fails
- High waterproofness
- Easy replacement of parts
- Two years warranty on labour and spare parts

THERMOSTART

Tank-style engine pre-heating systems
Without pump

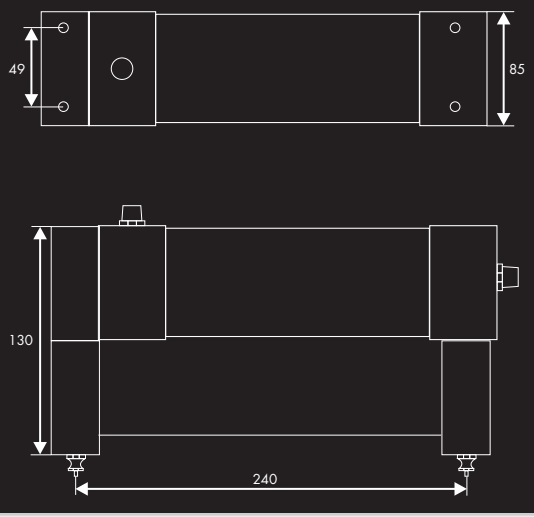

Weight: ThermoStart: 2,3 Kg

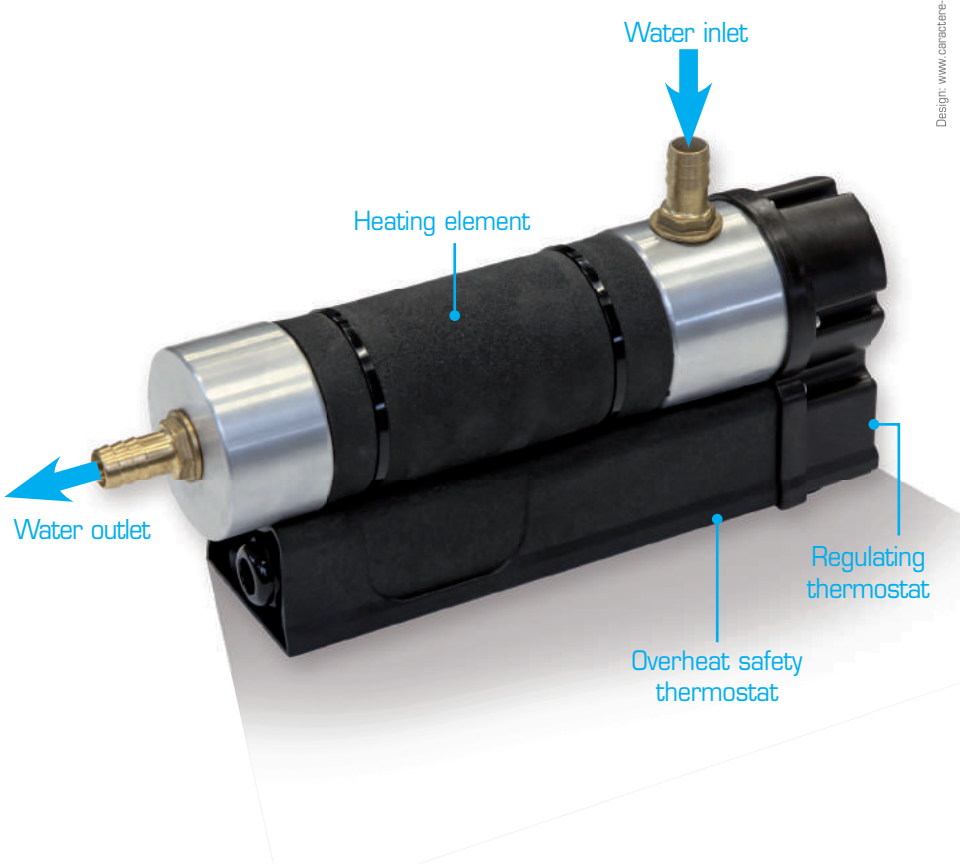

DELIVERED WITH FIXATION KIT.

INSTALLATION DIAGRAM

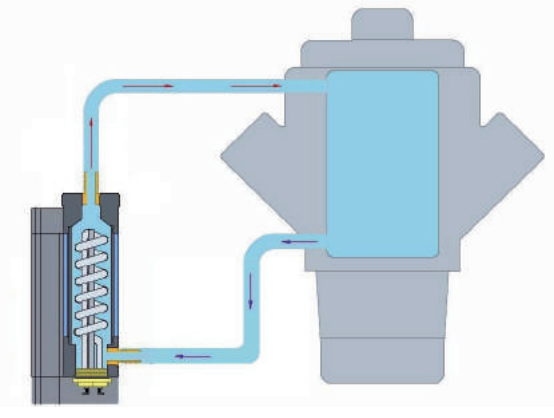

Technical characteristics

HEATING UNIT
- Machined aluminium AlMgSiBi heating unit
- PA66 protection covers and support base
- 150 cm power cable
- 3/4" water outlet and inlet fitted with 18 mm nozzles (ID 16 mm)

WATER TEMPERATURE CONTROL THERMOSTAT
- Adjustable thermostat 0-80°C rated 25A, 100.000 cycles
- Available temperature interval: 0°C - 80°C (32°F - 176°F)

SAFETY THERMOSTAT
- Security thermostat with manual reset, rated 25A, 6.000 cycles (110 °C / 230°F)

HEATING ELEMENT
- Low watt density heating element made of Incoloy 800 (7,5W / cm²) what increases its lifetime and those of the coolant
- Available powers: 1 Kw - 3 Kw
- Available voltages: 120V, 230V

Design: www.caractere-advertising.be

Carlor Engineering S.A. se réserve le droit de modifier les spécifications techniques contenues sur ce document, sans avis préalable. Document non-contractuel.